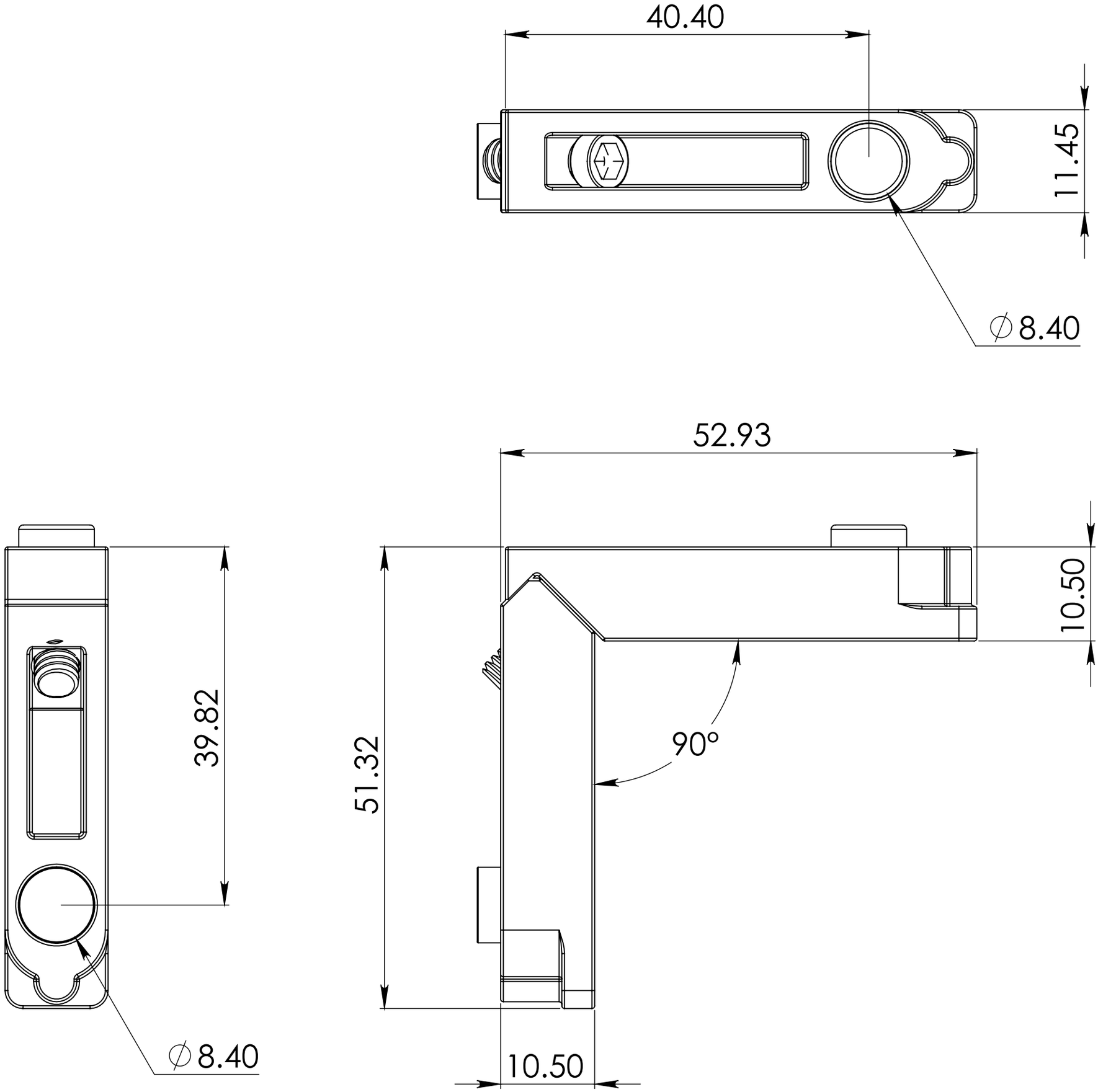
40.40
11.45
∅8.40
52.93
10.50
90°
51.32
39.82
∅8.40
10.50